ELIMEC P/N EL14650042

MM	IN
2.23	.088
2.28	.090
2.38	.093
3.17	.125
8.33	.328
8.45	.333
34.95	1.375

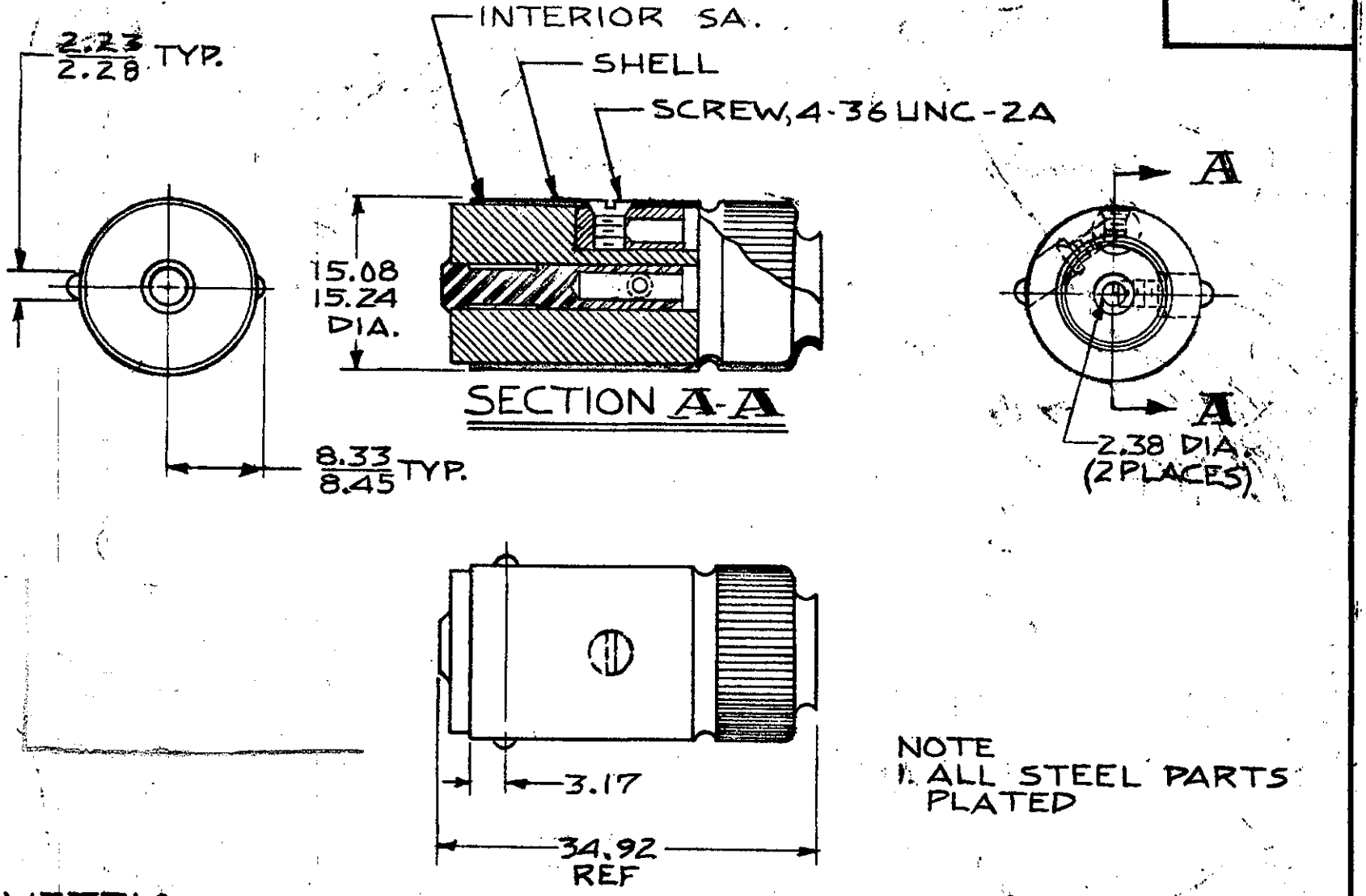

NOTE
1. ALL STEEL PARTS PLATED

METRIC

DO NOT SCALE

LET.	WAS	DATE	BY	LET	WAS	DATE	BY
				V	REVISE D 21353 REDRAWN	3/16/81	PS

MATERIAL	DRAWN	CHECKED	APPRV'D.	SCALE		DATE DRAWN
	CA	RJ		2X		7-20-42
FINISH						DATE BLUEPRINT
TOLERANCES DECIMAL ±.010 METRIC ±.25						