DWG. NO.	REVISION
D38999/22	—

REVISIONS

ECO NO.	LTR	DESCRIPTION	DATE	APPROVED
8687	–	NEW RELEASE	9/7/11	H.J.

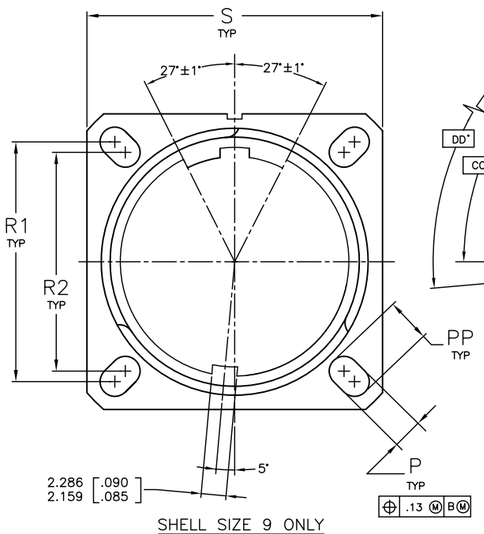

SHELL SIZE 9 ONLY

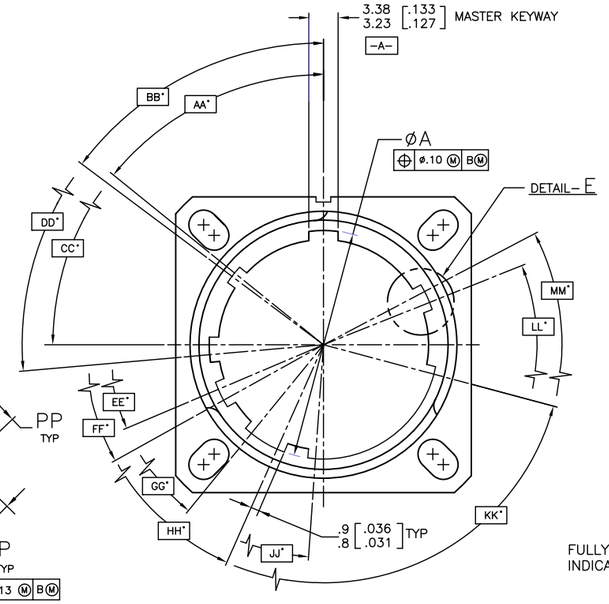

SHELL SIZES 11 THRU 25

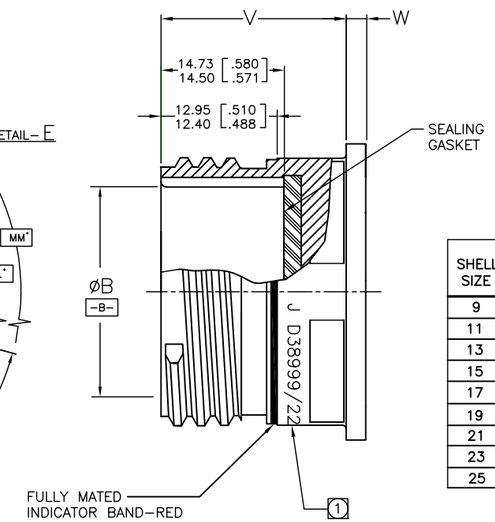

SHELL SIZE	SHELL SIZE CODE	SHELL KEYING											
		AA°	BB°	CC°	DD°	EE°	FF°	GG°	HH°	JJ°	KK°	LL°	MM°
9	A	SEE DRAWING											
11	B	51	53	90	95	113	119	141	156	176	255	292	298
13	C	51	53	90	95	113	119	141	156	176	255	292	298
15	D	51	53	90	95	113	119	141	156	176	255	292	298
17	E	49	80	135	153	169	180	196	200	244	293	310	—
19	F	49	80	135	153	169	180	196	200	244	293	310	—
21	G	49	80	135	153	169	180	196	200	244	293	310	—
23	H	49	80	135	153	169	180	196	200	244	293	310	—
25	J	49	80	135	153	169	180	196	200	244	293	310	—

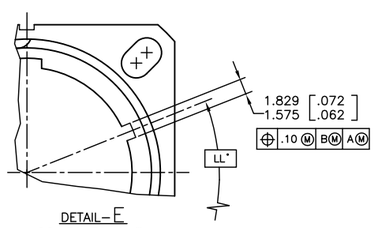

DETAIL– E
APPLIES TO SHELL
SIZES 17 THRU 25

SHELL SIZE	SHELL SIZE CODE	ØA		ØB		P		PP		R1		R2		S		V		W	
		MM	INCH	MM	INCH	MM ±.20	INCH ±.008	MM ±.20	INCH ±.008	MM	INCH	MM	INCH	MM ±.3	INCH ±.012	MM +.00 –.13	INCH +.000 –.005	MM ±.3	INCH ±.012
9	A	12.63 12.47	.497 .491	11.353 11.226	.447 .442	3.25	.128	5.49	.216	18.26	.719	15.09	.594	23.8	.937	20.83	.820	2.5	.098
11	B	15.88 15.73	.625 .619	14.66 14.51	.577 .571	3.25	.128	4.93	.194	20.62	.812	18.26	.719	26.2	1.031	20.83	.820	2.5	.098
13	C	19.63 19.49	.773 .767	17.50 17.35	.689 .683	3.25	.128	4.93	.194	23.01	.906	20.62	.812	28.6	1.126	20.83	.820	2.5	.098
15	D	22.84 22.69	.899 .893	20.65 20.50	.813 .807	3.25	.128	4.39	.173	24.61	.969	23.01	.906	31.0	1.220	20.83	.820	2.5	.098
17	E	25.99 25.84	1.023 1.017	23.85 23.70	.939 .933	3.25	.128	4.93	.194	26.97	1.062	24.61	.969	33.3	1.311	20.83	.820	2.5	.098
19	F	28.63 28.48	1.127 1.121	26.55 26.39	1.045 1.039	3.25	.128	4.93	.194	29.36	1.156	26.97	1.062	36.5	1.437	20.83	.820	2.5	.098
21	G	31.83 31.68	1.253 1.247	29.70 29.54	1.169 1.163	3.25	.128	4.93	.194	31.75	1.250	29.36	1.156	39.7	1.563	20.07	.790	3.2	.126
23	H	35.03 34.88	1.379 1.373	32.85 32.69	1.293 1.287	3.91	.154	6.15	.242	34.93	1.375	31.75	1.250	42.9	1.689	20.07	.790	3.2	.126
25	J	38.18 38.03	1.503 1.497	36.00 35.84	1.417 1.411	3.91	.154	6.15	.242	38.10	1.500	34.93	1.375	46.0	1.811	20.07	.790	3.2	.126

MILITARY PART NUMBER

D38999/22XX

CLASS
F – ALUMINUM, ELECTROLESS NICKEL
W – ALUMINUM, CADMIUM OLIVE DRAB

SHELL SIZE CODE
A THRU J

AERO PRODUCT IDENTIFIER
MIL–DTL–38999/22

4. ALL DIMENSIONS ARE IN MILLIMETERS.
DIMENSIONS IN [ ] ARE IN INCHES AND ARE FOR REFERENCE ONLY.

3. MATING CONNECTOR: PLUG PER MIL–DTL–38999/26, MIL–DTL–38999/29, MIL–DTL–38999/30 AND MIL–DTL–38999/31.

2. MANUFACTURED IN ACCORDANCE WITH MIL–DTL–38999, SER. III AND MIL–DTL–38999/22 SPEC.

1. MARKING: "AERO", MILITARY PART NUMBER, MANUFACTURING DATE CODE AND AERO PART NUMBER (IF SPACE ALLOWS) SHALL BE MARKED IN APPROXIMATE LOCATION SHOWN.

NOTES: UNLESS OTHERWISE SPECIFIED

MATERIAL:

RECEPTACLE .....: MACHINED ALUMINUM ALLOY

SEALING GASKET .....: SILICONE ELASTOMER

NEXT ASSY	USED ON
APPLICATION	

THIS DRAWING AND THE DATA DISCLOSED HEREIN OR HEREWITH IS CONFIDENTIAL AND PROPRIETARY AND IS NOT TO BE REPRODUCED, USED, OR DISCLOSED IN WHOLE OR IN PART TO ANYONE WITHOUT THE EXPRESSED WRITTEN PERMISSION OF AERO ELECTRIC CONNECTOR SYSTEMS INC.

ITEM NO.	QTY REQD	CAGE NO.	PART OR IDENTIFYING NO.	NOMENCLATURE OR DESCRIPTION	MATERIAL OR FINISH	ZONE

PARTS LIST

UNLESS OTHERWISE SPECIFIED: DIMENSIONS ARE IN INCHES
TOLERANCES ON:
DECIMALS ANGULAR
.X ± .1 ± 0° 30'
.XX ± .01 FRACTIONS
.XXX ± .005 ± 1/32
DO NOT SCALE DRAWING

MATERIAL

FINISH

TREATMENT

CONTRACT NO.

DRAWN	A.SHCHUR	9/2/11
CHECK		
APPROVED	H.JAMSHIDIAN	9/7/11

CAD FILENAME: ENG\DRAWINGS\CUD\D38999–22.–

conesys™ Aero Electric Connector Inc. 2280 208th Street Torrance, CA 90501

TITLE CUSTOMER USE DRAWING
RECEPTACLE, DUMMY STOWAGE, THREADED
REF.: MIL–DTL–38999, SER.III; MIL–DTL–38999/22

SIZE	CAGE NO.	DWG. NO.
D	59976	D38999/22

SCALE NONE SHEET 1 OF 1

D38999/22 — REVISION